8226

Beam Power Tube

CERMOLOX®

FORCED-AIR COOLED
INTEGRAL RADIATOR
MATRIX-TYPE CATHODE

HIGH GAIN-BANDWIDTH PRODUCTS
340 WATTS CW POWER OUTPUT AT 400 Mc
105 WATTS CW POWER OUTPUT AT 1215 Mc

For Compact Aircraft, Mobile, and Stationary Equipment Applications in the UHF Frequency Range

GENERAL DATA

Electrical:

Heater, for Matrix-Type, Oxide-Coated, Unipotential Cathode:		
Voltage (AC or DC)[a]	6.3	volts
Current at heater volts = 6.3	3.2	amp
Minimum heating time	60	sec
Mu-Factor, Grid No.2 to Grid No.1 for plate volts = 250, grid-No.2 volts = 250, and plate ma. = 100.	18	
Direct Interelectrode Capacitances:[b]		
Grid No.1 to plate	0.065 max.	pf
Grid No.1 to cathode & heater	15	pf
Plate to cathode & heater	0.019 max.	pf
Grid No.1 to grid No.2	20	pf
Grid No.2 to plate	3.2	pf
Grid No.2 to cathode & heater	1.30 max.	pf

Mechanical:

Operating Position	Any
Overall Length	2.620" ± 0.090"
Greatest Diameter (See *Dimensional Outline*)	1.625" ± 0.015"
Weight (Approx.)	4 oz
Radiator	Integral part of tube

Terminal Connections (See *Dimensional Outline*):

G_1 – Grid-No.1–Terminal Contact Surface
G_2 – Grid-No.2–Terminal Contact Surface
H – Heater–Terminal Contact Surface

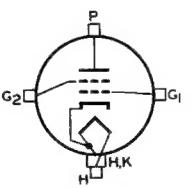

H,K – Heater– & Cathode–Terminal Contact Surface
P – Plate–Terminal Contact Surface

Thermal:

Plate, Grid No.2, Grid No.1, Cathode, and Heater Temperature[c]	250 max.	°C
Radiator Core Temperature[c]	250 max.	°C

Air Flow:

Through radiator — Adequate air flow to limit the radiator core temperature to 250° C should be delivered by a blower through the radiator before and during the application of plate, grid-No.2, and grid-No.1 voltages. Typical values of air flow directed through the radiator versus plate dissipation are shown in accompanying *Typical-Cooling-Requirements* curve.

To Plate, Grid-No.2, Grid-No.1, Cathode, and Heater Terminals — A sufficient quantity of air should be directed at the heater terminal and allowed to flow past each of these terminals so that their temperature does not exceed the specified maximum value of 250° C.

During Standby Operation — Cooling air is not usually required when only heater voltage is applied to the tube.

Plate Power, Grid-No.2 Power, Heater Power, and Air Flow — These may be removed simultaneously.

At Sea Level — Cooling requirements, with air flow directed through the radiator as shown in accompanying *Typical-Cooling-Requirements* curve, may be met by use of the following blowers and associated motors manufactured by Rotron Manufacturing Company Incorporated, Woodstock, New York, or equivalent:

For 100% Plate Dissipation:				
Blower Model No.	KS-2501	AS-2501	AXIMAX I	AXIMAX I
Motor Model No.	165AS	323JS	464YS	499JS
Phase (ϕ)	1	3	1	3
Frequency (cps)	60	60	400	400
Voltage (v)	115	220	115	200
For 80% Plate Dissipation:				
Blower Model No.	KS-201	AS-201	AXIMAX I	AXIMAX I
Motor Model No.	92AS	323JS	464YS	499JS
Phase (ϕ)	1	3	1	3
Frequency (cps)	60	60	400	400
Voltage (v)	115	220	115	200
For 60% Plate Dissipation:				
Blower Model No.	KS-1504	AS-1504	AXIMAX I	AXIMAX I
Motor Model No.	92AS	323JS	464YS	499JS
Phase (ϕ)	1	3	1	3
Frequency (cps)	60	60	400	400
Voltage (v)	115	220	115	200

RF POWER AMPLIFIER & OSCILLATOR — Class C Telegraphy and RF POWER AMPLIFIER — Class C FM Telephony

Maximum CCS[d] Ratings, *Absolute-Maximum Values:*

DC PLATE VOLTAGE	2500 max.	volts
DC GRID-No.2 VOLTAGE	400 max.	volts
DC GRID-No.1 VOLTAGE	-200 max.	volts
DC PLATE CURRENT	250 max.	ma
DC GRID-No.1 CURRENT	30 max.	ma
GRID-No.2 INPUT[e]	10 max.	watts
PLATE DISSIPATION	300 max.	watts

Typical CCS Operation:

In cathode-drive circuit

Frequency	*400*	*1215*	*Mc*
DC Plate Voltage	2500	1250	volts
DC Grid-No.2 Voltage	250	300	volts
DC Grid-No.1 Voltage[f]	−15	−30	volts
DC Plate Current	250	250	ma
DC Grid-No.2 Current	2	1	ma
DC Grid-No.1 Current	15	7	ma
Driver Power Output (Approx.)[g]	5	10	watts
Output-Circuit Efficiency	90	60	%
Useful Power Output[h]	340[j]	105	watts

Maximum Circuit Values:

Grid-No.1 Circuit Resistance	30000 max.	ohms
Grid-No.2 Circuit Impedance	10000 max.	ohms
Plate Circuit Impedance	[k]	

[a] See *Operating Considerations under Heater.*

[b] Measured with special shield adapter.

[c] See *Operating Considerations under Temperature* and also *Dimensional Outline* for temperature measurement points.

[d] Continuous Commercial Service.

[e] See *Operating Considerations under Grid No.2.*

[f] Obtained preferably from fixed supply and grid-No.1 resistor. Sufficient voltage should be provided from fixed supply to protect the tube in case of drive loss.

[g] Driver power output includes circuit losses and is the actual power measured at the input to the grid circuit. It will vary depending upon the frequency of operation and the circuit used.

[h] Measured in a typical coaxial-cavity circuit.

[j] For Minimum Useful Power Output value, see *Characteristics Range Values, Test No.8.*

[k] See *Operating Considerations under Precautions.*

CHARACTERISTICS RANGE VALUES

Test No.	*Note*	*Min.*	*Max.*	
1. Heater Current	1	2.90	3.55	amp
2. Direct Interelectrode Capacitances:				
Grid No.1 to plate	2	–	0.065	pf
Grid No.1 to cathode & heater	2	13.5	16.5	pf
Plate to cathode & heater	2	–	0.019	pf
Grid No.1 to grid No.2	2	16.8	22.2	pf
Grid No.2 to plate	2	2.7	3.7	pf
Grid No.2 to cathode & heater	2	–	1.30	pf
3. Grid-No.1 Voltage	1,3	−6.5	−20.5	volts
4. Grid-No.1 Cutoff Voltage	1,4	–	−65	volts
5. Reverse Grid-No.1 Current	1,3	–	−20	μa
6. Grid-No.2 Current	1,3	−8	+2	ma

Test No.	Note	Min.	Max.	
7. Interelectrode Leakage Resistance:				
Between plate and all other electrodes	5	10	–	megohms
Between any two electrodes except plate. . .	5	1	–	megohm
8. Useful Power Output.	6	300	–	watts

Note 1: With 6.3 volts ac or dc on heater.

Note 2: Measured with special shield adapter.

Note 3: With dc plate voltage of 2500 volts, dc grid-No.2 voltage of 300 volts, and dc grid-No.1 voltage adjusted to give a dc plate current of 120 ma.

Note 4: With dc plate voltage of 2500 volts, dc grid-No.2 voltage of 400 volts, and dc grid-No.1 voltage adjusted to give a dc plate current of 2.5 ma.

Note 5: Under conditions with tube at 20° to 30° C without any voltages applied to the tube, the resistance between the two electrodes is measured with a 200-volt Megger-type ohmmeter having an internal impedance of 1.0 megohm.

Note 6: In a single-tube, cathode-driven coaxial-cavity class C amplifier circuit at 400 Mc and for conditions with 6.3 volts ac or dc on heater, dc plate voltage of 2500 volts and driver power output of 5 watts, dc grid-No.2 voltage of 250 volts, grid-No.1 voltage and tuning circuit are adjusted for maximum power output with plate current not to exceed 250 ma and grid-No.1 current not to exceed 20 ma.

OPERATING CONSIDERATIONS

Heater

The heater of the 8226 should be operated at constant voltage rather than constant current. The rated heater voltage of 6.3 volts should be applied for 60 seconds to allow the cathode to reach normal operating temperature before voltages are applied to other electrodes.

The life of the cathode can be conserved by operating at the lowest heater supply voltage which will give the desired performance. Good regulation of the heater supply voltage is, in general, economically advantageous from the viewpoint of tube life; in no case should the voltage fluctuations be more than 5%. This recommendation is particularly applicable at the higher operating frequencies.

Temperature

The maximum radiator core or electrode temperature of 250° C is a tube rating and is to be observed in the same manner as other ratings. The temperature may be measured with temperature-sensitive paint, such as Tempilaq. This paint is manufactured in the form of liquid or stick by the Tempil Corporation, 132 West 22nd Street, New York 11, N.Y.

Grid No.2

Grid-No.2 current is composed of a positive-current component resulting from cathode emission to grid No.2 and a negative-current component resulting from secondary emission phenomena. Because it is the net result of these component

currents which is read on a meter in the grid-No.2 circuit, grid-No.2 dissipation cannot be accurately determined. Operation similar to conditions given under *Typical Operation* in the tabulated data section will minimize the possibility of exceeding maximum grid-No.2 input rating.

The grid-No.2 circuit must be capable of maintaining the proper grid-No.2 voltage in the presence of moderate negative dc current as well as normal values of positive current. Complete protection can be achieved by the use of a well-regulated power supply, a grid-No.2-to-ground impedance that is low enough to prevent gradual build-up of grid-No.2 voltage and/or catastrophic build-up (runaway) under negative current conditions, and a current overload relay to protect the grid No.2 against positive or negative currents of the order of one-tenth the required plate current.

Standby Operation

During long or frequent standby periods, the 8226 may be operated at decreased heater voltage to conserve life. It is recommended that the heater voltage be reduced to 80% of normal during standby periods up to 2 hours. For longer periods, the heater voltage should be turned off.

Precautions

In beam power tubes with closely spaced electrodes, such as the 8226, extremely high voltage gradients occur even with moderate tube operating voltages. Any arc-over between electrodes may be destructive. A series impedance in the plate lead is recommended. The resultant plate impedance giving a plate-voltage-supply regulation of no better than 10% is usually sufficient.

Protective devices should be used to protect not only the plate but also grid No.2 against overload. In order to prevent excessive plate current flow and resultant overheating of the tube, the common ground lead of the plate circuit should be connected in series with the coil of an instantaneous overload relay. This relay should be adjusted to remove the dc plate voltage and dc grid-No.2 voltage when the average value of plate current reaches a value slightly higher than normal plate current. A protective device in the grid-No.2 supply should remove the grid-No.2 voltage when the dc grid-No.2 current reaches a value slightly higher than normal.

The rated plate and grid-No.2 voltages of this tube are extremely dangerous. Great care should be taken during the adjustment of circuits. The tube and its associated apparatus, especially all parts which may be at high potential above ground, should be housed in a protective enclosure. The protective housing should be designed with interlocks so that personnel can not possibly come in contact with any high-potential point in the electrical system. The interlock device should function to break the primary circuit of the high-voltage supplies when any gate or door of the protective housing is opened, and should prevent the closing of the primary circuit until the door is again locked.

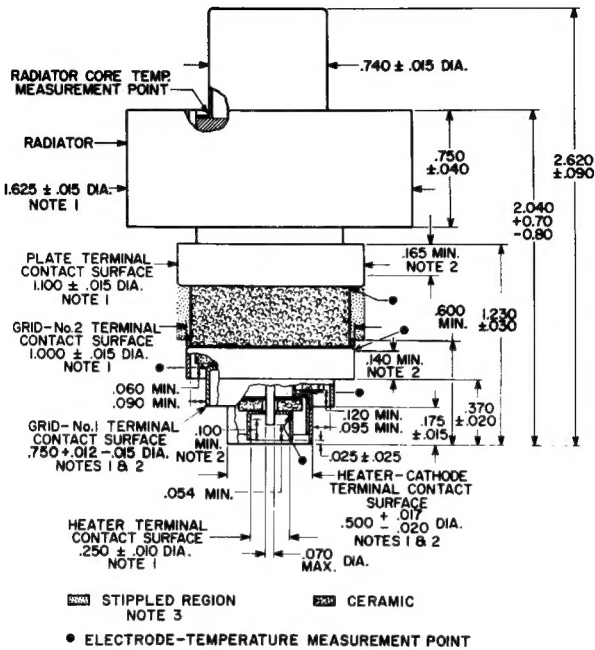

92CM-12011

ALL DIMENSIONS IN INCHES

NOTE 1: SEE *SKETCH G1* FOR THE MAXIMUM DIAMETRICAL SPACE REQUIRED BY THE 8226 BASED UPON THE DIAMETER AND ECCENTRICITY OF RADIATOR BAND AND OF EACH RING TERMINAL.

NOTE 2: THE DIAMETER OF THE TERMINAL IS HELD TO THE INDICATED VALUE ONLY OVER THE CONTACT SURFACE LENGTH. THE CONTACT SURFACE LENGTH OF THE HEATER-CATHODE AND GRID-No.1 TERMINALS EXTENDS FROM THE EDGE OF ITS TERMINAL TO THE PLANE COINCIDENT WITH THE EDGE OF THE ADJACENT LARGER TERMINAL.

NOTE 3: KEEP ALL STIPPLED REGIONS CLEAR. DO NOT ALLOW CONTACTS OR CIRCUIT COMPONENTS TO PROTRUDE INTO THESE ANNULAR REGIONS.

SKETCH GI

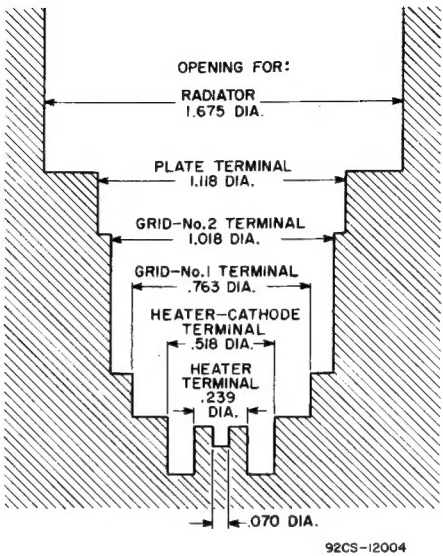

ALL DIMENSIONS IN INCHES

PREFERRED MOUNTING ARRANGEMENT
& LAYOUT OF ASSOCIATED CONTACTS

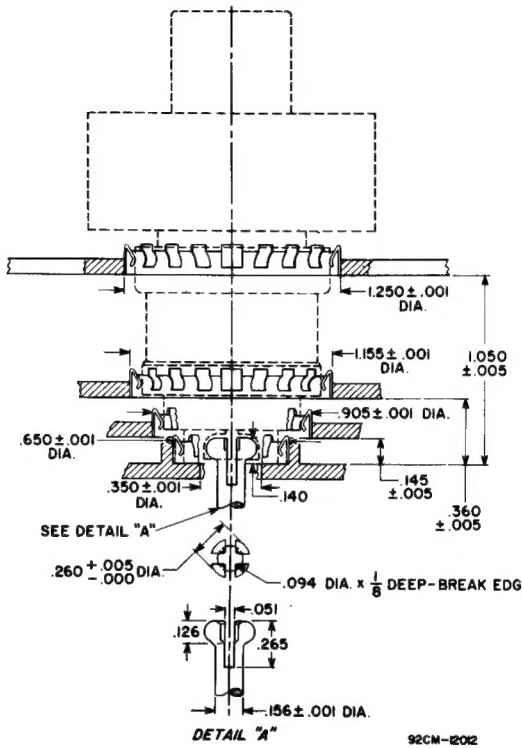

ALL DIMENSIONS IN INCHES

NOTE: ALL FINGER STOCK (No. 97-380) MADE BY INSTRUMENT SPECIALTIES COMPANY, LITTLE FALLS, NEW JERSEY.

TYPICAL COOLING REQUIREMENTS

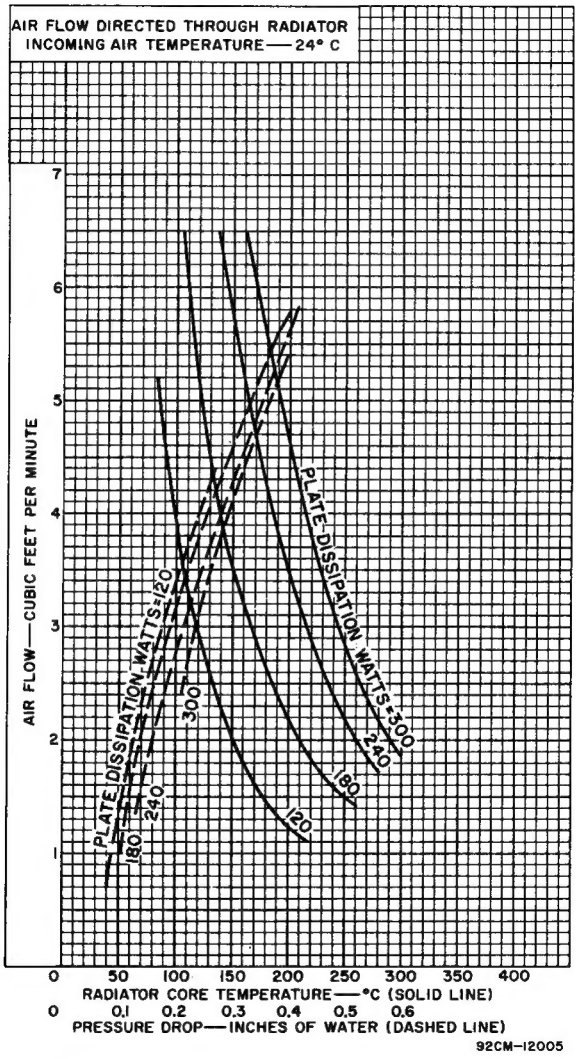

92CM-12005

TYPICAL PLATE CHARACTERISTICS

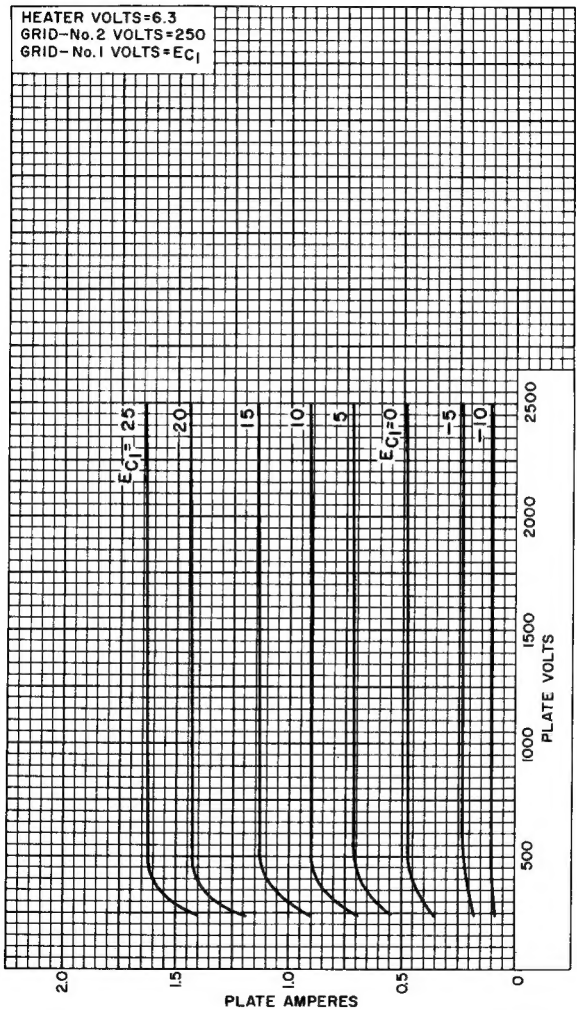

92CM-12006

TYPICAL PLATE CHARACTERISTICS

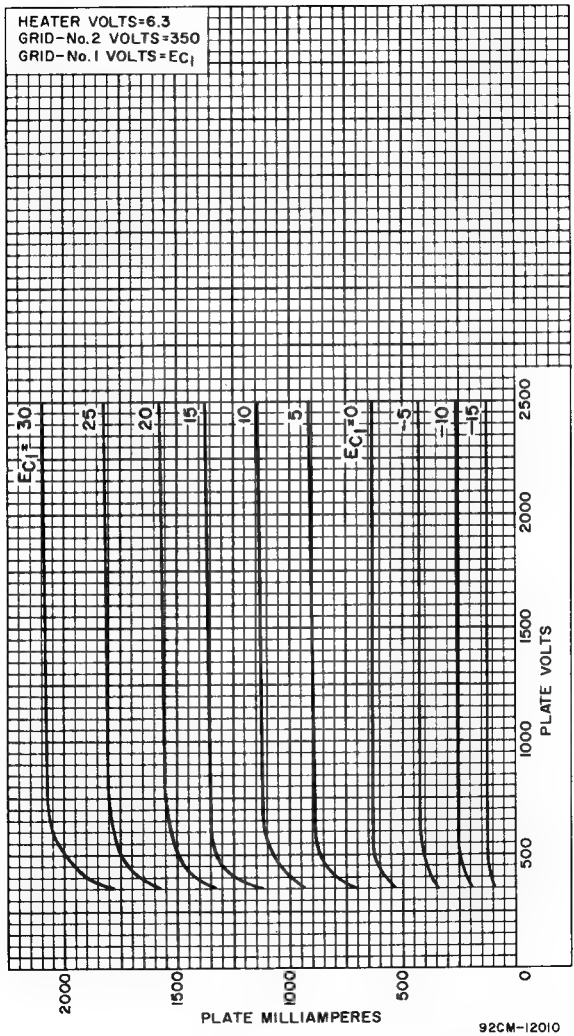

TYPICAL CHARACTERISTICS

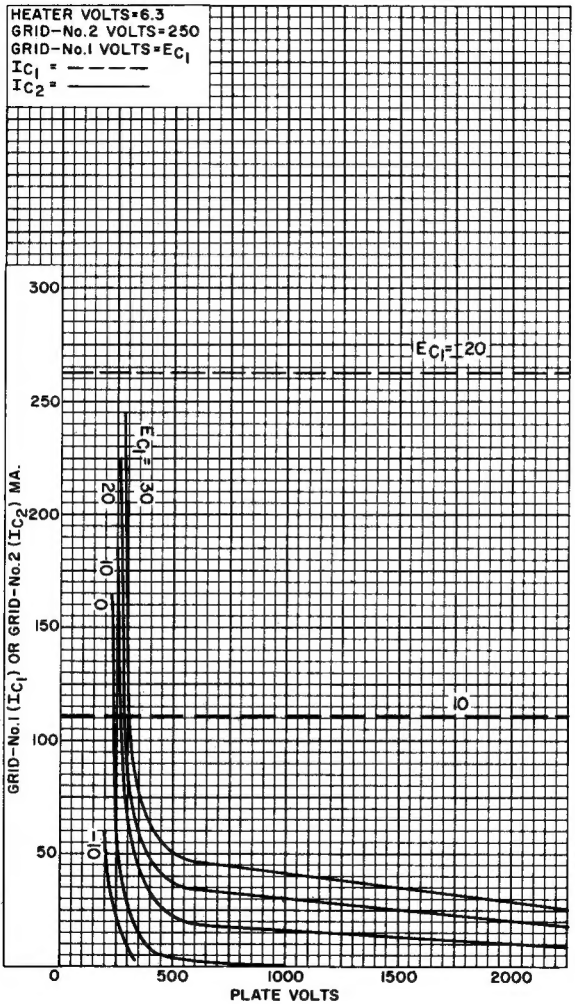

92CM-12016

TYPICAL CHARACTERISTICS

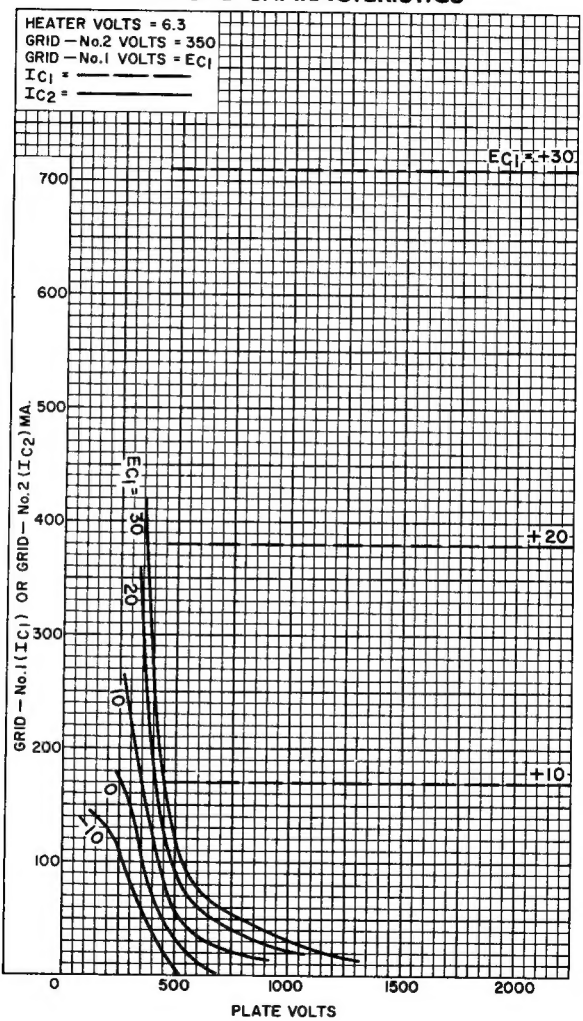

92CM—12013

TYPICAL CONSTANT-CURRENT CHARACTERISTICS

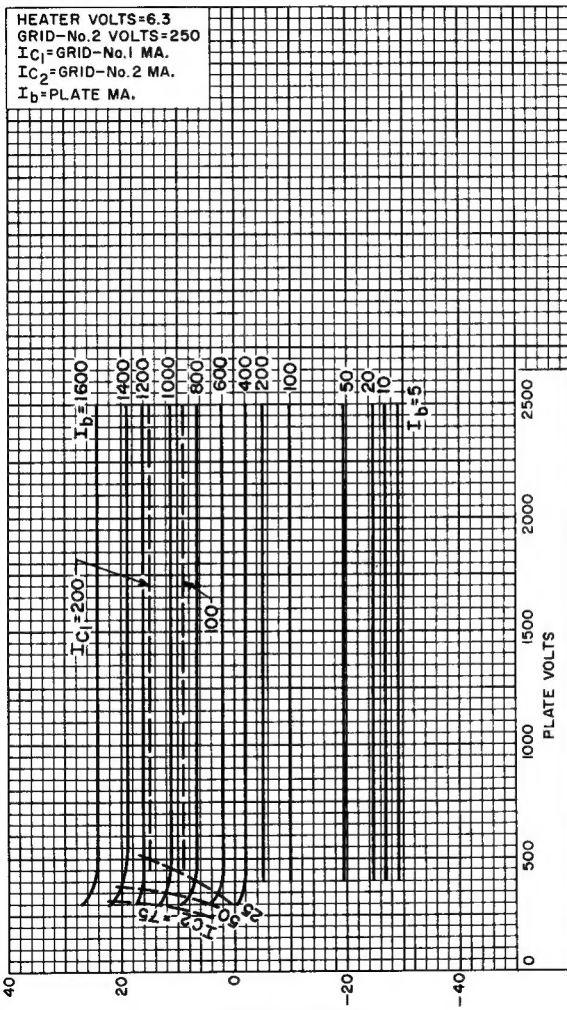

TYPICAL CONSTANT-CURRENT CHARACTERISTICS

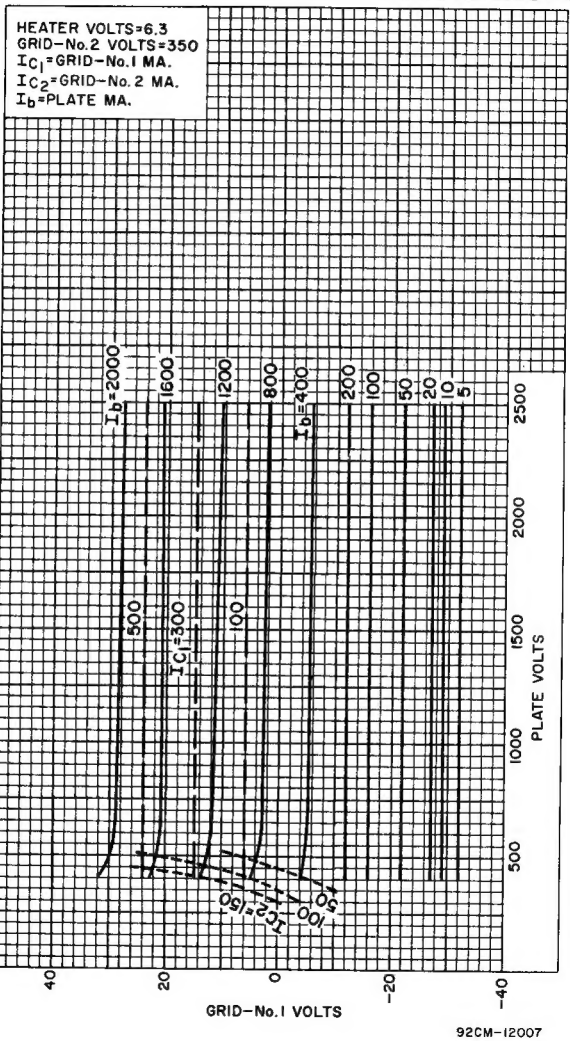

92CM-12007